computar

M5020FIC-MPIR

f=50mm F2.0 Day & Night
for 2/3 type 5 Megapixel Cameras, Fixed-focal, Manual Iris
C-Mount

Model No.		M5020FIC-MPIR		Effective Lens Aperture	Front	φ25.2mm	
Focal Length		50mm			Rear	φ11.0mm	
Max. Aperture Ratio		1:2.0		Back Focal Length		14.8mm	
Max. Image Format		11.3mm x 6.0mm(φ12.8mm)		Flange Back Length		17.526mm	
Operation Range	Iris	F2.0 - F16C		Mount		C-Mount	
	Focus	2m - Inf.		Filter Size		M40.5 × 0.5	
	Zoom	–		Dimensions		φ46.5mm × 53.9mm	
Control	Iris	Manual		Weight		155.0 g	
	Focus	Manual					
	Zoom	–					
Angle of View	D	2/3 type	12.2°	1/2 type	8.9°	1/3 type	6.7°
	H		9.8°		7.1°		5.3°
	V		7.3°		5.3°		4.0°
CMV2000	D	14.1°					
11.264 × 5.984	H	12.5°					
(φ12.75)	V	6.7°					
Operating Temperature		−10℃ - +50℃					
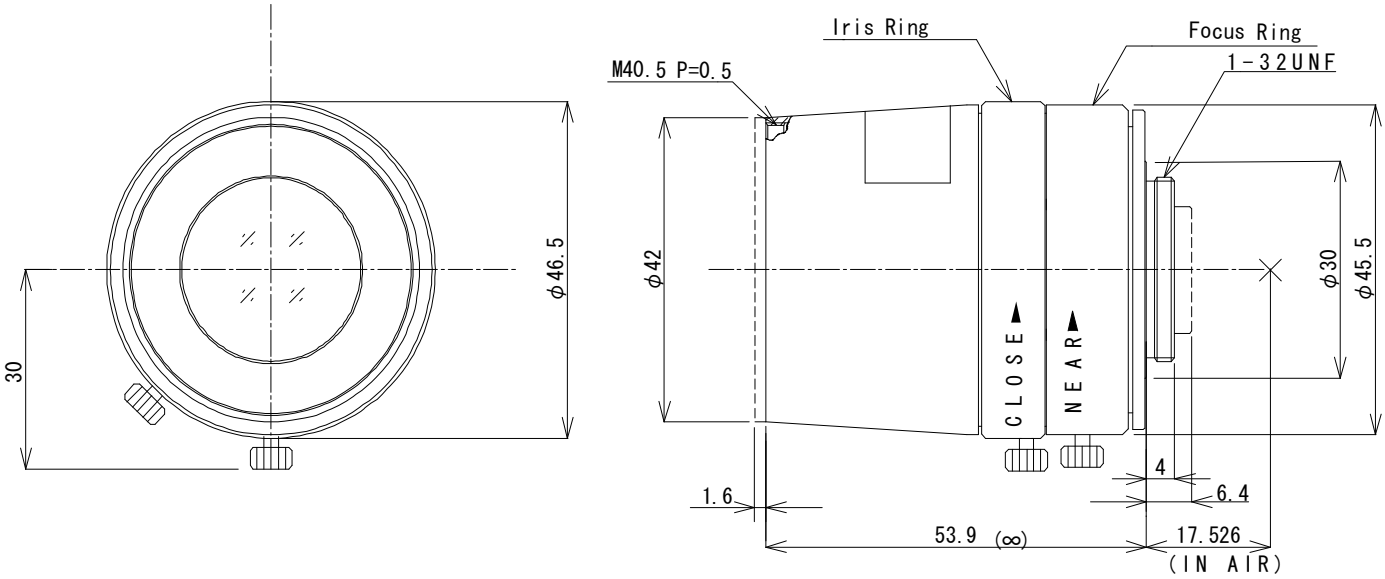
Dimensions